S4E300-AB03-43

AC axial fan

straight blades (A series)

with guard grille for full nozzle

ebm-papst Mulfingen GmbH & Co. KG
Bachmühle 2 · D-74673 Mulfingen
Phone +49 7938 81-0
Fax +49 7938 81-110
info1@de.ebmpapst.com
www.ebmpapst.com

Limited partnership · Headquarters Mulfingen
County court Stuttgart · HRA 590344

General partner Elektrobau Mulfingen GmbH · Headquarters Mulfingen
County court Stuttgart · HRB 590142

Nominal data

Type	**S4E300-AB03-43**		
Motor	**M4E068-CF**		
Phase		1~	1~
Nominal voltage	VAC	240	240
Nominal voltage range	VAC	220 .. 240	220 .. 240
Frequency	Hz	50	60
Type of data definition		ml	fa
Valid for approval / standard		CE	CE
Speed	min^{-1}	1220	1240
Power input	W	65	82
Current draw	A	0.28	0.35
Motor capacitor	µF	1.5	1.5
Capacitor voltage	VDB	400	400
Max. back pressure	Pa	25	25
Min. ambient temperature	°C	-40	-40
Max. ambient temperature	°C	65	55

ml = max. load · me = max. efficiency · fa = running at free air · cs = customer specs · cu = customer unit
Subject to alterations

AC axial fan

straight blades (A series)

with guard grille for full nozzle

Technical features

Mass	3 kg
Size	300 mm
Surface of rotor	Coated in black
Material of terminal box	ABS plastic
Material of blades	Sheet steel, coated in black
Material of guard grille	Steel, coated in black plastic (RAL9005)
Number of blades	5
Direction of air flow	"A"
Direction of rotation	Clockwise, seen on rotor
Type of protection	IP 44; Depending on installation and position as per EN 60034-5
Insulation class	"B"
Humidity class	F1-2
Max. permissible ambient motor temp. (transp./ storage)	+ 80 °C
Min. permissible ambient motor temp. (transp./storage)	- 40 °C
Mounting position	Shaft horizontal or rotor on bottom; rotor on top on request
Condensate discharge holes	Rotor-side
Operation mode	S1
Motor bearing	Ball bearing with anti-freezing grease
Touch current acc. IEC 60990 (measuring network Fig. 4, TN system)	< 0.75 mA
Electrical leads	Via terminal box, integrated capacitor connected via terminal box
Motor protection	Thermal overload protector (TOP) wired internally
Cable exit	Variable
Protection class	I (if protective earth is connected by customer)
Product conforming to standard	EN 60335-1; CE

ebm-papst Mulfingen GmbH & Co. KG · Bachmühle 2 · D-74673 Mulfingen · Phone +49 (0) 7938 81-0 · Fax +49 (0) 7938 81-110 · info1@de.ebmpapst.com · www.ebmpapst.com

AC axial fan

straight blades (A series)

with guard grille for full nozzle

Product drawing

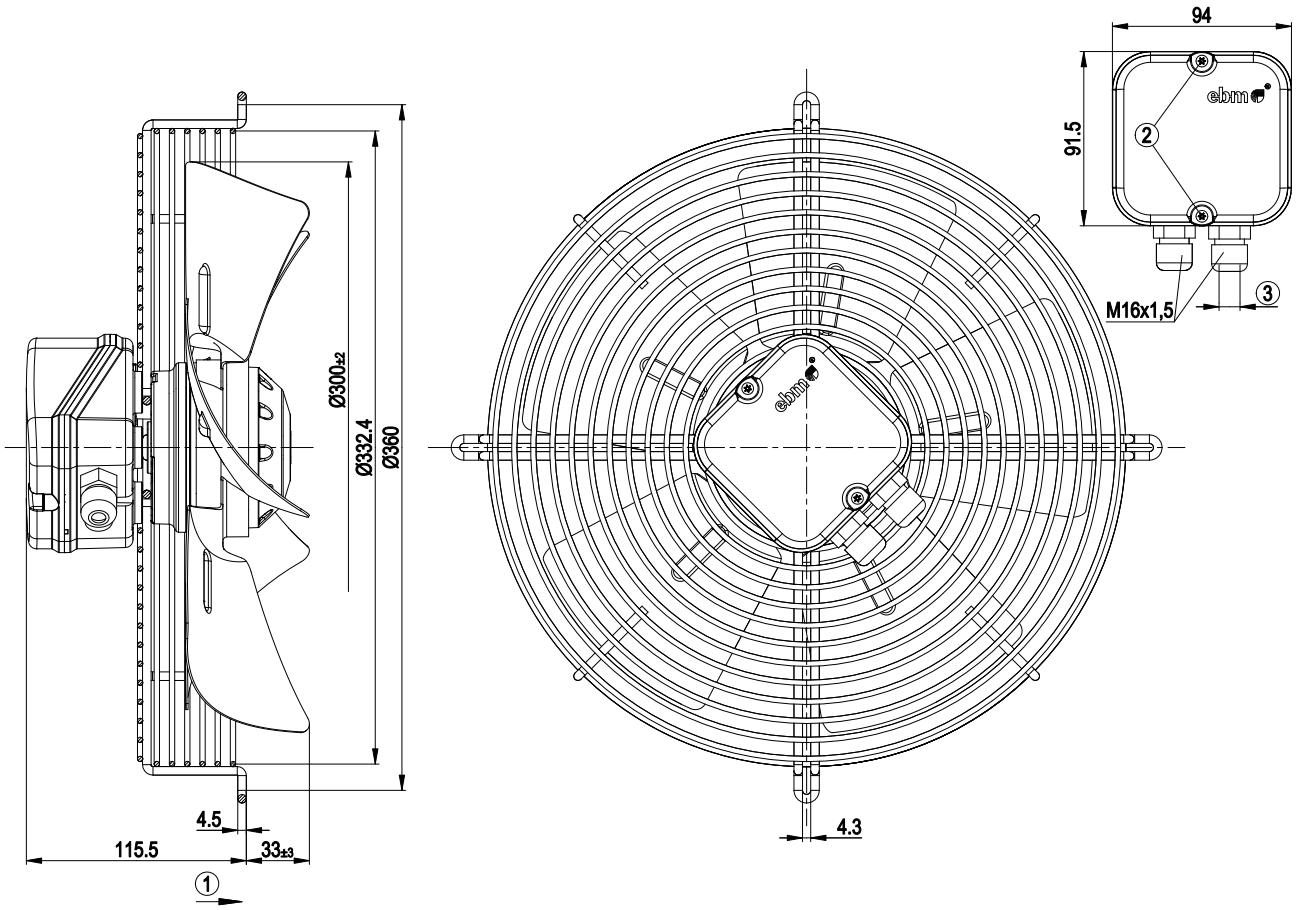

1	Direction of air flow "A"
2	Tightening torque 0.5±0.1 Nm
3	Cable diameter: max. 7.5 mm; tightening torque 1.3±0.2 Nm

Connection screen

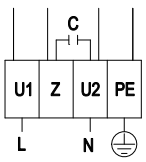

L	= U1 = blue	Z	brown	N	= U2 = black
PE	green/yellow				

ebm-papst Mulfingen GmbH & Co. KG · Bachmühle 2 · D-74673 Mulfingen · Phone +49 (0) 7938 81-0 · Fax +49 (0) 7938 81-110 · info1@de.ebmpapst.com · www.ebmpapst.com

AC axial fan

straight blades (A series)

with guard grille for full nozzle

Charts: Air flow 50 Hz

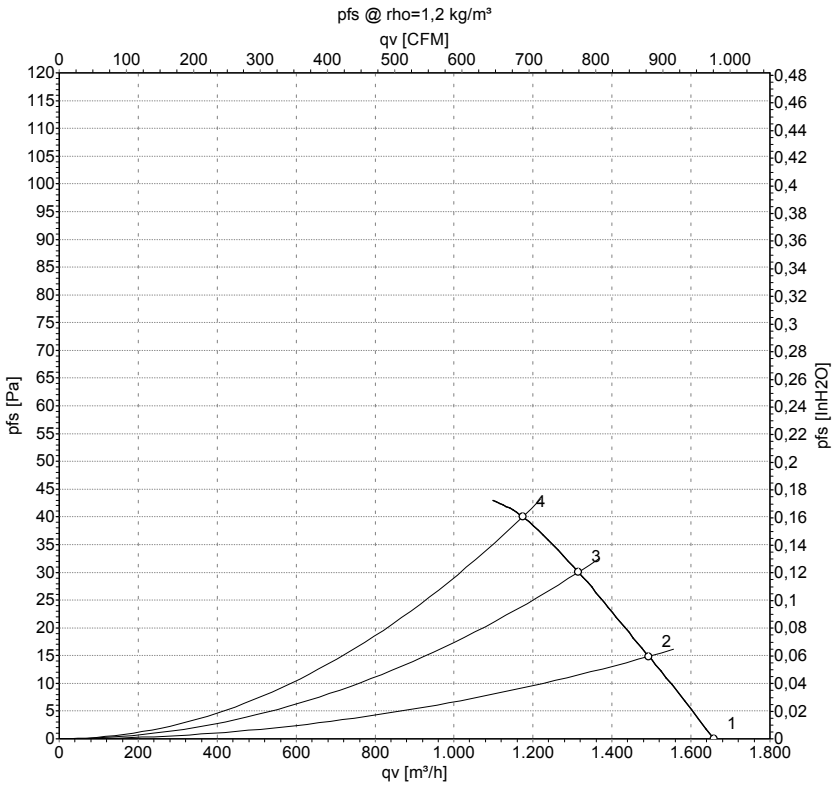

Measurement: LU-31081

Air performance measured as per ISO 5801 Installation category A. For detailed information on the measuring set-up, please contact ebm-papst. Suction-side noise levels: LwA measured as per ISO 13347 / LpA measured with 1m distance to fan axis. The values given are valid under the measuring conditions mentioned above and may vary according to the actual installation situation. With any deviation from the standard set-up, the specific values have to be checked and reviewed with the unit installed.

Measured values

	U	f	n	P_e	I	qv	p_{fs}
	V	Hz	min^{-1}	W	A	m^3/h	Pa
1	240	50	1270	63	0.26	1660	0
2	240	50	1250	65	0.27	1495	15
3	240	50	1230	67	0.28	1315	30
4	240	50	1205	69	0.29	1175	40

U = Supply voltage · f = Frequency · n = Speed · P_e = Power input · I = Current draw · qv = Air flow · p_{fs} = Pressure increase

ebm-papst Mulfingen GmbH & Co. KG · Bachmühle 2 · D-74673 Mulfingen · Phone +49 (0) 7938 81-0 · Fax +49 (0) 7938 81-110 · info1@de.ebmpapst.com · www.ebmpapst.com